AOK®

Quality, Honesty, Service and Innovation

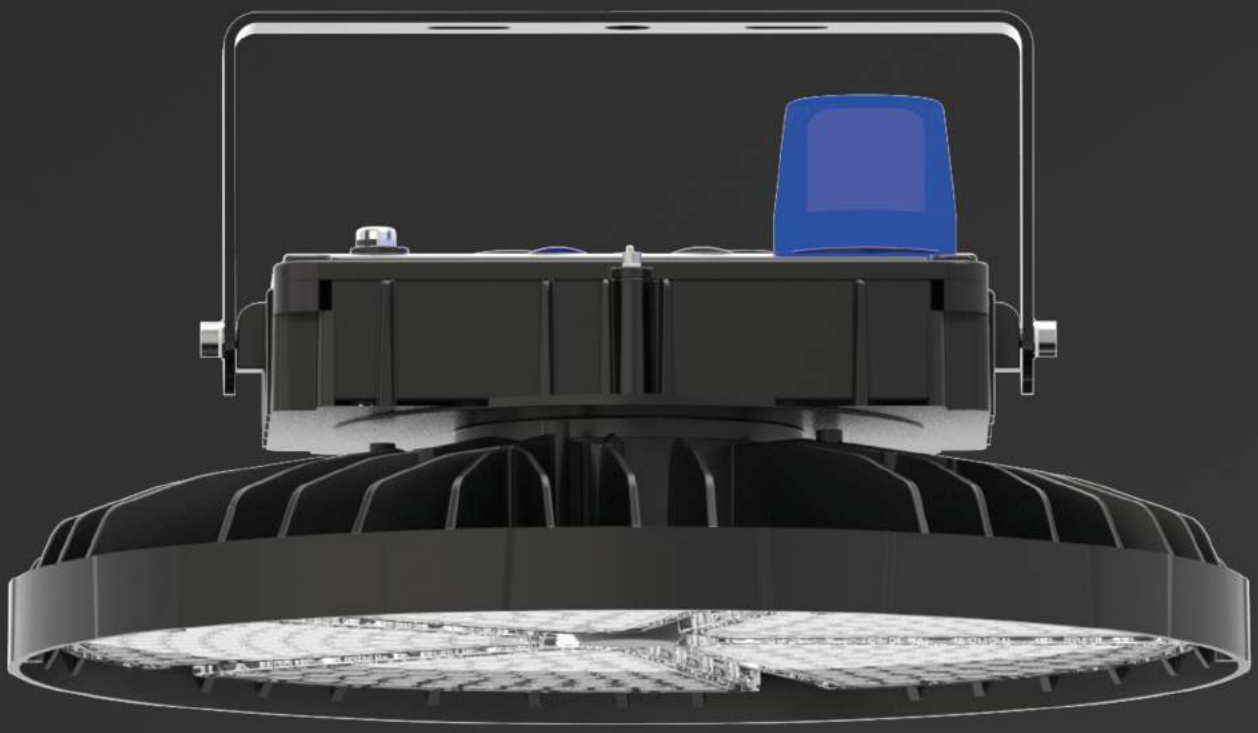

OFU -SERIES

HIGH POWER LED HIGH BAY LIGHT

UP TO **170LM/W**

1500W MHL REPLACEMENT

- POWER: 300W/400W/460W

EXPERTS WITH PROFESSIONAL SOLUTION

WWW.AOKLEDLIGHT.COM

HIGH POWER LED HIGH BAY LIGHT

AOK LED LIGHTCO., LTD.

up to 170lm/w

OFU SERIES

SPECIFICATIONS &FEATURE

- oFU series is designed for Industrial lighting , a superior high output, high efficiency LED High Bay light, featuring a unique optical design that virtually eliminates glare with minimal impact on performance. It is available in a variety of distributions for lighting applications such as factory, warehouses, workshops etc

CONSTRUCTION

- Light engine is thermally isolated from driver components
- UV stabilized polyester powder paint finish
- Horizontal and vertical aiming

OPTICAL / ELECTRICAL

- Four distributions to maximize performance:15°, 30°, 60°, 90°
- -40℃~50℃ operating temp range
- 1-10V dimming driver standard
- 100-277V operation 50/60HZ standard, 200-480V 50/60HZ optional

LIGHTING PROTECTION

- With 20KV surge protection device option

UNIFIED GLARE RATING

- Glare has always been a concern with LED products and it as got increasingly more attention with higher output fixtures.The standard low glare shield block lights outside of the main beam, so from other viewing angles the fixture virtually disappears. The low glare shields are also designed to have minimum impact on the total light output.

FINISH

- Rugged, weather-tight design and 3G Vibration ratings ensure durability even in harsh environments

LED

- Modular optical assemblies enable 3 unique performance packages
- 50K lumens, 300Watts
- 60K lumens, 400Watts
- 70K lumens, 460Watts
- 3000K, 4000K, 5000K, 5700K, 6500K CCT
- Minimum CRI of 70, 80 and 90 optional

FIXTURE DIMENSIONS

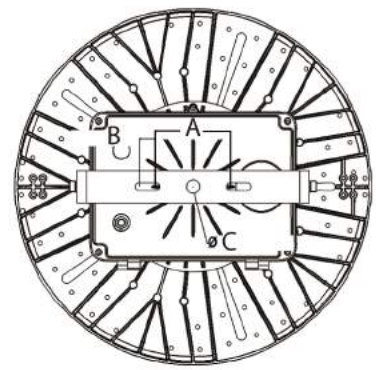

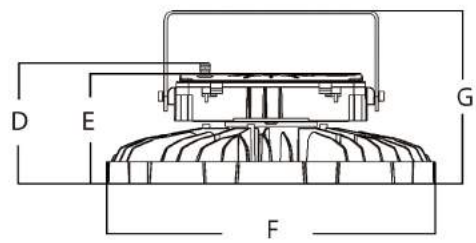

A	B	C	D
11.7cm/4.6"	2.5cm/0.98"	ϕ2cm/0.81"	20.5cm/8.07"
E	**F**		**G**
18.5cm/7.29"	ϕ55.6cm/21.92"		29.4cm/11.6"

Dimensions of 300W, 400W, 460W, replace up to 1500W MHL

CERTIFICATIONS/LISTINGS

ORDERING INFORMATION

AOK - [ ] - [ ] - [ ] - [ ] - [ ] - [ ] - [ ] - [ ]

WATTS	VOLTAGE	LED CHIPS	TYPE OF SENSOR	CCT&CRI	DISTRIBUTION	MOUNT	OPTIONS
300WoFU	NV=100-277V	L5=LUMILEDS5050	00=Without Sensor	3070=3000K 70CRI	15D=15deg	YOKE MOUNT	10KV SPD
400WoFU	HV=347/480V	O5=OSRAM5050	SN=Motion sensor	4070=4000K 70CRI	30D=30deg		20KV SPD
460WoFU			PH=Photocell	5070=5000K 70CRI	60D=60deg		
			DV=Dimmable	5770=5700K 70CRI	90D=90deg		
				3080=3000K 80CRI			
				4080=4000K 80CRI			
				5080=5000K 80CRI			
				5780=5700K 80CRI			

Quality, Honesty, Service and Innovation

WARRANTY

10-year warranty standard. Please consult with AOK sales for detailed agreement.

CONSTRUCTION FEATURES OF OFU SERIES

1. Waterproof connector
2. Top performance driver 1-10V dimmable
3. Die casting fixture body
4. Yoke mount bracket
5. Surge protection device
6. Optical grade ploycarbonate lens multiple beam angle optional

TECHNICAL SPECIFICATIONS @5000K

MODEL	WATTS	Replace MHL	LUMINAIRE LUMEN OUTPUT / OPTIC	IP & IK	FIXTURE DIMENSION	NW	MAXIMUM CURRENT
AOK-300WoFU	300	1000W	45925lm / 15° 51536lm / 30° 50487lm / 60°	IP65&IK08	23*12*23" (58*31*58cm)	44lbs(20kgs)	3.3A
AOK-400WoFU	400	1200W	56222lm / 15° 65915lm / 30° 65032lm / 60°	IP65&IK08	23*12*23" (58*31*58cm)	44lbs(20kgs)	4.4A
AOK-460WoFU	460	1500W	61112lm / 15° 73004lm / 30° 74136lm / 60°	IP65&IK08	23*12*23" (58*31*58cm)	44lbs(20kgs)	5.1A

PHOTOMETRY

15degree

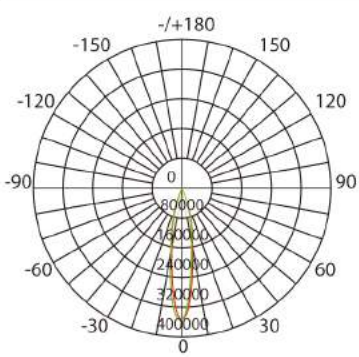

AVERAGE BEAM ANGLE(50%):18.2DEG
UNIT:cd

— C0/180 Ic:353054 9.2,9.1
— C90/270 Ic:354895 10.0,8.2

30degree

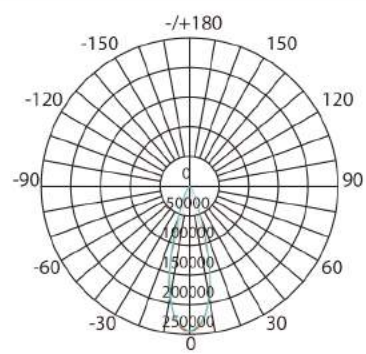

AVERAGE BEAM ANGLE(50%):29.8 DEG
UNIT:cd

— C0/180,29.5deg
— C60/240,29.9deg
— C30/210,29.6deg
— C90/270,30.1deg

60degree

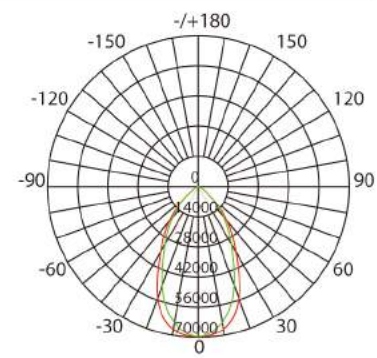

AVERAGE BEAM ANGLE(50%):57.4 DEG
UNIT:cd

— C0/180 Ic:69654 30.1,30.1
— C90/270 Ic:69607 27.3,27.3

SPECIFICATIONS AND DETAILS ARE SUBJECT TO CHANGE WITHOUT NOTIFICATION, CONTACT AOK FOR UP TO DATE DETAILS.