All In One Solar Street Light Installation Guide

-Before Installation

This procedure is designed as an installation aid. Skilled tradespeople that are familiar with general construction and electrical installation techniques should perform the installation. Licensed electricians should provide electrical installation connections. Installations and connections should be done in accordance with all national and local codes and permits. In no way is this document intended to construe warranty or fitness of use of the products described, nor is it intended to provide safety instruction for those installing the product.

- Test Before Installation

1. Open the package and check that there’ s no damage on the package and that the accessories are complete.
2. Turn on the power switch to test the charge and discharge function.
3. Advised to read the FAQ and Common Fault Analysis carefully before installation.

-Installation Tools Reference

5mm/6mm/14mm
hex wrench

Cross screwdriver

Note: Installation tool is not
inclulded with product.

- Packing List:

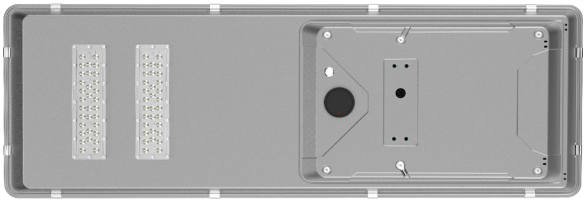

Lamp body 1PC

Adjustable bracket 1PC
Diameter: 64mm (2.5”)
Depth: 95mm (3.7”)

Hexagon
socket screw
M8*25mm 4PCS

Spring washer
ø8mm 4PCS

Hexagon socket
headless set screw
M10*25mm 8PCS

FOR REFERENCE ONLY

Read Before Installation

- Working Way

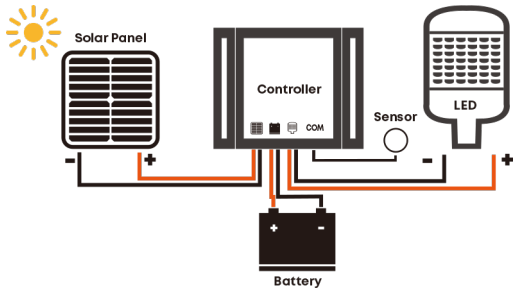

Solar panels receive sunlight during the day to generate electricity, which is charged by a controller to a battery; When the solar panel voltage is lower than the set value (rated 5V), the controller will stop charging and drive the LED to emit light

- Default Lighting Mode

1) 2H-Detected 100%, None 30%;
   3H-Detected 70%, None 30%;
   3H-Detected 50%, None 20%;
   4H-Detected 30%, None 10%;
2) Subject to specific order requirements

Lighting Mode (Optional)
_____ -Detected _____%, None _____%

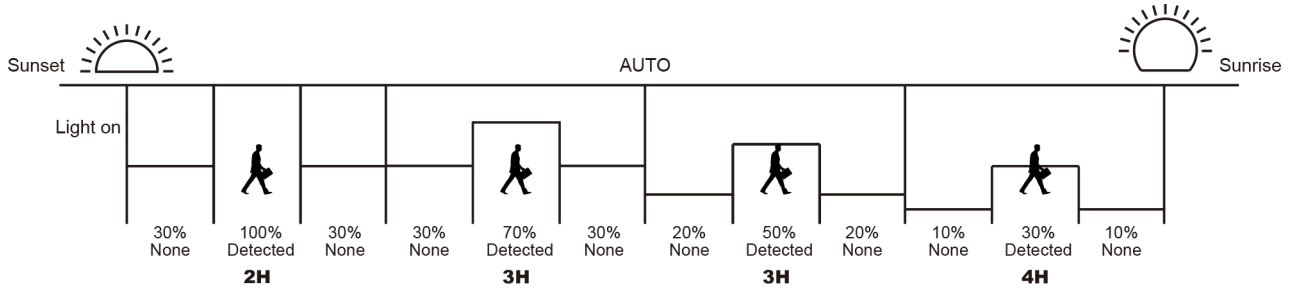

- Function Description

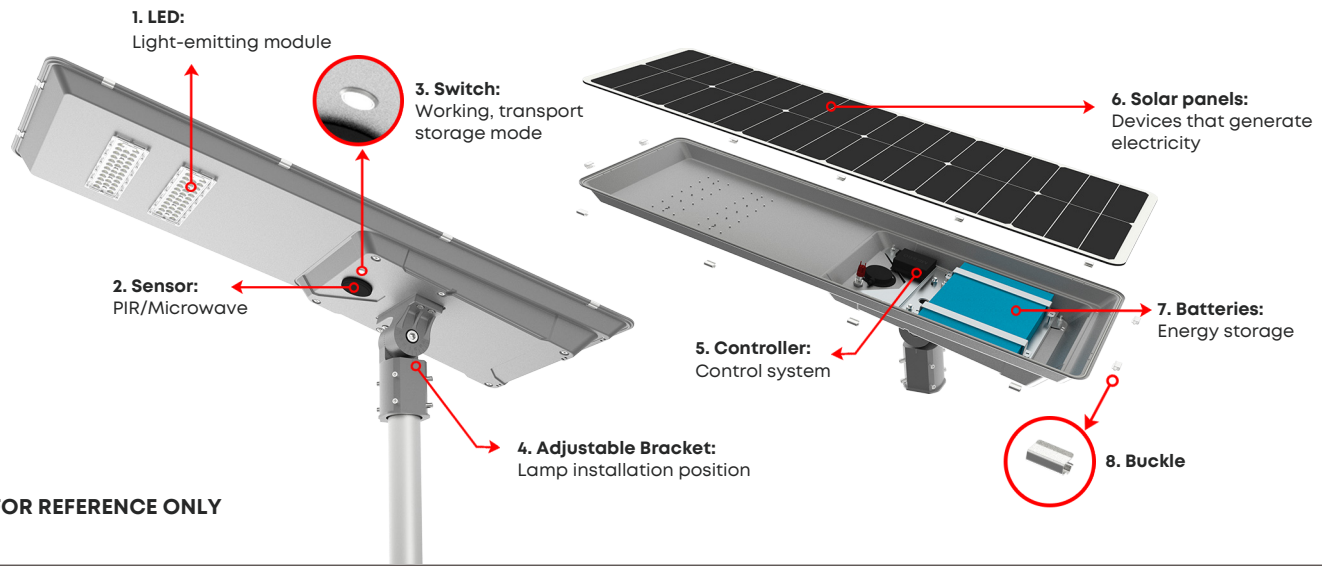

Read Before Installation

- FAQ

1. How to activate the solar LED light?
After opening the package, turn on the power switch of the light (the button is in the state of power on when recessed), the fixture will be lighted up; If it is not, place the fixture under the sunlight for about 10 minutes, and then completely covered with the solar panel, the fixture will be lighted up.

2. How to test the charging and discharging function of solar LED light?
After turning on the power switch, completely cover the solar panel of the fixture or place it in a dark environment (no reflection), the light will be lighted up; Then place the fixture under the sunlight and the light will be turned off.

3. The fixture can not be lighted up since it is placed for a long time?
As the battery will consume power, the system will lose power completely. Leaving the battery for a long time may cause irreversible damage, so you need to charge it every three months if it is not in the use.

4. Shorter light time?
The shorter light time is due to low battery power, or low charging efficiencies, such as rainy days, solar panels covered by trees, and dust; Lithium-ion battery losses will also lead to less energy storage.

5. Before installation, if you find that the battery of the solar light is out of power and choose to use the charger to charge the battery, please consult customer service for the specifications and user manual. Please note that the use of mismatched charging may damage the light.

6. Charger and remote control are not standard accessories, please consult and order separately.

- Common Fault Analysis

Fault phenomenon of luminaire	Failure analysis	Troubleshooting methods
No light, no indicator	1. The switch may not conduct.	1. Whether the switch button is normal, if the switch is pressed, there will be a sound. 2. If the switch button is damaged, you can open the 2 wires of the switch, and use a multimeter to test the continuity of the switch in different states., If it is a switch problem, you can cut it and replace it with a new one, or you can cut it off, connect the two wires in parallel, and wrap them with insulating tape (the switch function could not be used).
	2. The connection terminals may be in poor contact, loose, or fall off.	Visually inspect for loose wires，Use a multimeter to test whether the two terminals of the terminal are connected. If it is connected, it is normal; if it is not connected, it may be due to poor wiring or the terminal is not connected, and the terminal can be replaced.
	3. Out of battery.	Make sure that other components are normal, use a multimeter to test whether there is voltage across the battery, if there is voltage, the battery is normal；If there is no voltage, it needs to be activated by charging (theluminaire should be exposed to the sun for more than 0.5 hours).

Fault phenomenon of luminaire	Failure analysis	Troubleshooting methods
No light, no indicator	4. The solar panel may be damaged and cannot be activated when out of battery.	Make sure that other components are under normal conditions. in sunlight, use a multimeter to test the short-circuit current and open-circuit voltage of the solar panel. If there is no voltage or there is voltage and no current, it means that the solar panel is damaged.
	5. The controller may be damaged.	Make sure that other parts are in normal condition, it can be determined that the controller is damaged and needs to be replaced with a new controller.
The light is off, the red indicator flashes quickly	1. The load may be shorted or open.	Visually inspect or use a multimeter to test whether there is a short circuit or an open circuit between the positive and negative terminals of the load. Or use the remote control to read the luminaire status to confirm the problem.
	2. The battery or solar panel may be badly wired.	Visually inspect for loose wires. Use a multimeter to test whether the two terminals of the terminal are connected. If it is connected, it is normal; if it is not connected, it may be due to badly wiring or the terminal is not connected, and the terminal can be replaced .
	3. The battery may be overcharged and overdischarged or protected by the battery protection board.	Use a multimeter to test whether there is voltage at both ends of the battery, if there is a voltage, it means it is normal.If there is no voltage, it needs to be charged to activate, and it needs to be charged once after a maximum of 3 months of storage. If it cannot be activated, it is judged that the battery is faulty and needs to be replaced with a new battery.
	4. Overtemperature protection possible.	First, confirm whether the appearance of the temperature sensor of the controller is damaged. If it is damaged, you need to replace the controller. If the appearance is normal, confirm whether the actual battery compartment temperature exceeds 65 ℃. If it exceeds 65℃, it is normal protection, and it will recover after the temperature is normal. When the temperature is lower than 65℃, use the remote control to read the parameters to confirm whether the temperature protection value is set correctly to 65 ℃. If the setting is wrong, you can modify the parameters and send them to the controller.
	5. solar panel damaged possible.	In sunlight, use a multimeter to test the short-circuit current and open-circuit voltage of the solar panel. If there is no voltage or there is voltage and no current, it means that the solar panel is damaged.
	6. controller damaged possible.	Make sure that the above components are in normal condition, it can be determined that the controller is broken and needs to be replaced with a new one.

Fault phenomenon of luminaire	Failure analysis	Troubleshooting methods
The battery life is significantly shorter	1. The azimuth or inclination of the solar panel may be incorrect,lead to a decrease in charge.	Observe whether the solar panel installation method of the luminaire is correct. Install the solar panel in the northern hemisphere to face south, and the tilt angle is recommended to be equal to the local latitude +5~20°.
	2. The solar panel may be shaded,lead to a decrease in charge.	Observe whether the solar panel of the luminaire receives direct sunlight during the day, remove the shade, or keep the luminaire away from the shade.
	3. There may be dust accumulation on the solar panel, which reduces the charging capacity.	It is recommended to clean it every 6 months. The specific frequency depends on the dust accumulation. It can be cleaned with neutral tap water.
	4. The frequency of induction may be high, causing high power consumption.	It can increase the luminaire configuration or use the remote control to set parameters to reduce the energy consumption of the luminaire, such as reducing power and shortening the discharge time.
	5. It is possible that the battery capacity has deteriorated significantly.	Professional lithium battery capacity testing equipment can be used to test the actual capacity of the battery. If the battery capacity is lower than 80% during the warranty period, it indicates that the battery has decayed in advance and needs to be replaced with a new battery.
	6. The solar panel may be damaged and cannot be charged.	In sunlight, use a multimeter to test the short-circuit current and open-circuit voltage of the solar panel. If there is no voltage or there is voltage and no current, it means the solar panel is damaged.
Insensitive induction, misoperation	1. May be affected by the installation environment.	Check whether there is interference from base stations, metal meshes, etc. near the installation of lamps, resulting in insensitivity of induction. Whether there are moving objects near the light pole, such as buildings, trees, water flow, etc., affecting the malfunction, whether the installation is too high, etc.
	2. It may be that the sensor is not energized or damaged.	Observe whether there is a red indicator light on the sensor. If there is an indicator light, it means power is on. If there is no indicator light, you need to confirm that the sensor wiring is normal. You can open the battery compartment and reconnect the sensor connector. If there is still no indicator light, it means the sensor is connected. Abnormal, need to replace the new sensor.

- Installation Procedure

1. Open the package and check whether the appearance of the fixture is in good condition. Click the switch button to test whether the fixture is working.

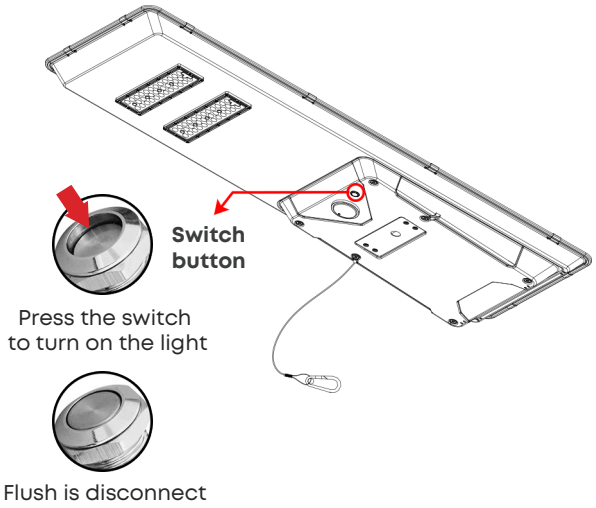

2. Install the bracket on the fixture and tighten the screws with a torque of 17Nm by using a wrench. (Prepare accessories and tools :6mm hex wrench, 4PCS M8*25 screws, 4PCS ø8 spring washers, 1PC adjustable bracket .)

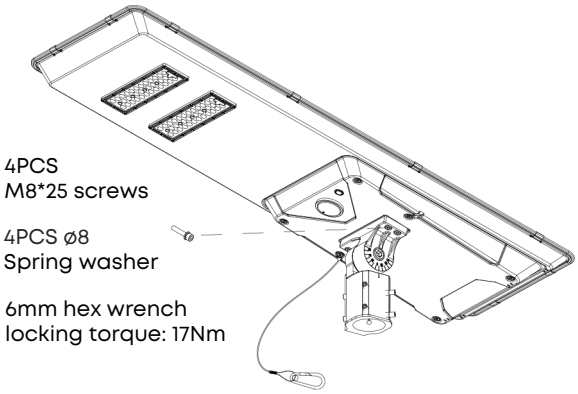

3. Insert the fixture into the lamp post and tighten the M10 screw with a torque of 25Nm by using a wrench (Tools: 5mm hex wrench, 8PCS M10*25 screws).

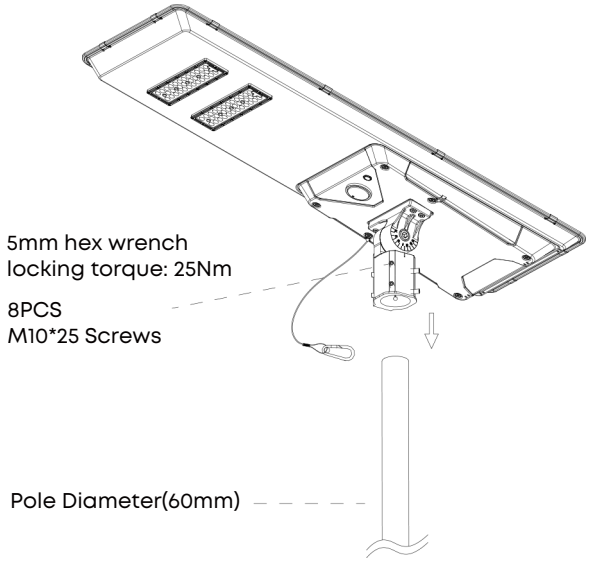

4.The steel wire rope is wound around the lamp post, press to open the clasp .
Fasten the clasp to the light pole.

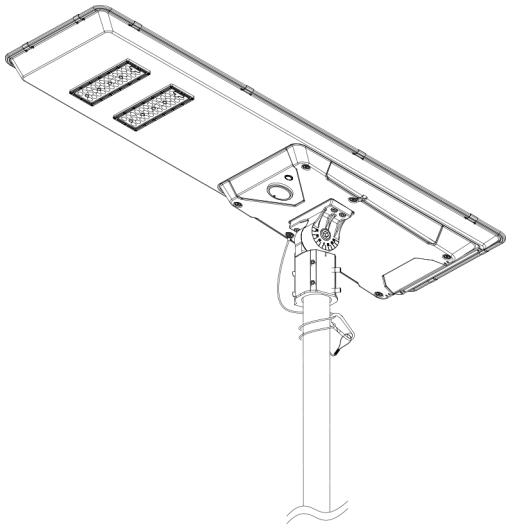

Caution:
1. Turn the power off during installation. Do not connect or disconnect under load.
2. Caution risk of fire.
3. Please do not put this product into municipal waste, check the local regulations to deal with the electronic products.

Supplementary Function Description

-Detection Distance(30W-120W)

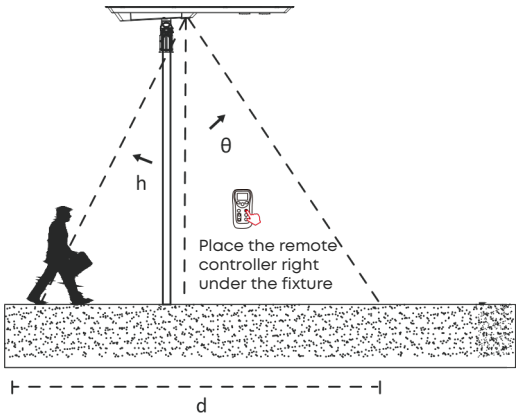

*Remote control function is optional

Inductive Type (alternative)	θ-Angle (X-axis rotation: 360°)	h (Height of lamp rod)	d (Inductive width)
IR (Infrared)	60°	6-8m	6-10m
WB (Microwave)	65°	6-10m	7-10m

Remote control distance 5-8 meters, installation height and environment and other factors will affect the controller sensitivity, please refer to the actual field. Note: Please do not place 2 or more lights within 12 meters at the same time while using the remote controller, receiving or sending may fail.

-Indicator Status

Indicator Light	State of Indicator Light	Description of Indicator Light	State of Remote Controller System
Red	Normally on	Normal system	Idle/discharge
	Slow flash	Charging	Charge
	Fast flash	System failure	Short circuit/open circuit/over-discharge/PV over-temperature/BV over-temperature/EBMS/over-temperature

-Remote Control Read State Analysis

Remote control reading state	introduce	Troubleshooting Methods
OV-D	The battery is overdischarged and the voltage is low	It will recover automatically after the battery is fully charged. If the battery cannot be restored or charged, use a multimeter to test whether there is voltage at both ends of the battery. If there is no voltage, the battery is faulty. Replace the battery with a new one
OV-BV	battery volts high	Check whether the battery voltage is correct
L-SHT	Load short circuit	Use a multimeter to check whether the load is properly connected
OV-T	The battery temperature is too high.	Ventilate and cool the battery. The battery automatically recovers when the temperature drops.Such as temperature decreasing or display failure, first confirm the controller temperature sensor appearance whether have damage, if damaged need to replace the controller, if the normal appearance, the use of the remote control to read parameters, confirmation is properly aligned, 65 degrees Celsius temperature protection value, if set error, can be sent to the controller after the modification of the parameter
L-OPN	Didn't pick up the load	Check whether the load is properly connected or the positive and negative terminals are inversely connected.
OV-C	The charging current of the battery is too large, and the PV charging power is limited	If the panel power exceeds the rated power, no handling is required.
OV-PV	The voltage of the PV panel is too high	Check whether the panel voltage exceeds the maximum voltage
P-REV	The positive and negative poles of the photovoltaic board are connected in reverse	Use a multimeter to check whether the positive and negative electrodes of the photovoltaic board are correctly connected
E-BMS	Lithium battery protection board overcharge protection	After the voltage drops, the lithium battery will automatically resume charging

Matters Need Attention

WARNING

1. Solar panels are fragile, so please do not scratch or bump when installed. Scratches, dirt and shelter on the surface will affect the power generation efficiency of solar panels.

2. Solar lamp installation. In the northern hemisphere, solar panel should face to the south, and in the southern hemisphere, solar panel should face to the north.

3. The product must be charged every 3 months when idle; If it needs to be transported or stored for a long time, it is necessary to timely check, charge and record; otherwise, the battery will be damaged. Charging method: In sunny conditions, open the lamp switch, the solar panel is placed facing the sun, continuous charging for 1-2 days. Note: Use the remote control to read the status, display charging or charging, the battery voltage is more than 13V; or use a multimeter to test the voltage at both ends of the battery is more than 13V.

4. Installation location shall be away from WIFI,omnidirectional antennas for mobile communications, small base stations for telecommunications, TV antennas, etc. Signal source too close may disable，the dimming functions.

5. The luminaire should not be installed on vibrating surfaces, otherwise the sensor is easy to be triggered by mistake.

6. The luminaire shaking may cause the sensor to be triggered by mistake.

7. The dimming function of luminaire might be effected by the objects with vibration in its sensing area. The lamp should not be installed on the surface of vibration, and the lamp should not be covered (e.g. trees or leaves), otherwise the sensor may be triggered or not triggered by mistake.

8. The product has good penetration effect on plastic and wood. Avoid metal shielding around the antenna, which will reflect and block microwave and affect the actual induction effect.

9. Walls, glass, and ceramics will bring reflection and penetration attenuation of electromagnetic waves, and reduce the sensing distance of the sensor. The thicker the material is, the more serious the attenuation is.

10. The movement of animals and objects within the sensing range may cause the light to turn on, which is a normal phenomenon.

Matters Need Attention

11. The electromagnetic wave emitted by microwave sensor in the practical application environment, the different reflectivity of obstacles will lead to different induction range, which is normal phenomenon.

12. Please turn on the power switch of the fixture before use, and test whether it is functional before installation.

13. Ensure that the power switch is on when working normally. Please test whether the lamps are charged and discharged normally before installation (the solar panel is charged by sunlight and the lamp is off; Solar panels blocked sunlight do not charge the light) .

14. View the entire installation guide. Do not disassemble by non-professional technicians or under the guidance of professional technicians.

15. Do not place the product in water or fire, as there may be explosion risk.

16. Please pay attention to the secondary transport protection, do not damage the lamp.

17. Disposal at end of life: Battery to be removed by professional.

18. The product contains lithium batteries, please follow the air transport regulations when shipping, should be regarded as flammable and explosive goods, storage should be separated from other items to avoid damage.

19. Charging and discharging requirements: Ambient Temperature -10°C to 50°C (14°F to 122°F), Storage Temperature -20°C to 45°C (-4°F to 113°F).

20. The installation distance, both transverse and longitudinal, should be greater than 1.5m. Individual lamps may be a misfit if the installation distance is too close.

21. The Company reserves the right of final interpretation of the product.

*Due to the constant improvements in product development, individual parameters might change. Please refer to our sales or R&D team for most up-to-date content as specifications are subject to change without notice.